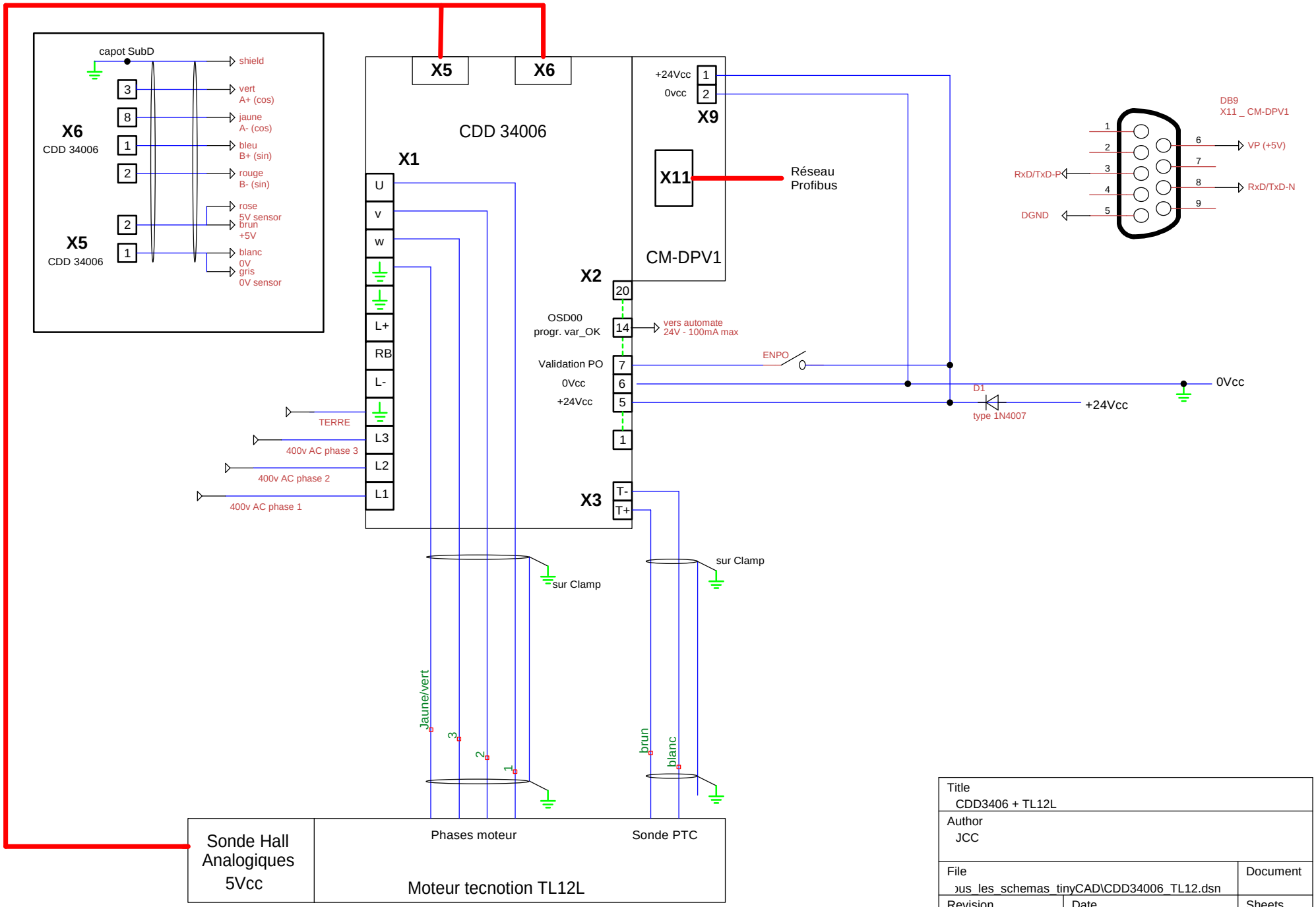

Title CDD3406 + TL12L		
Author JCC		
File ous_les_schemas_tinyCAD\CDD34006_TL12.dsn		Document
Revision 1.0	Date 28/10/06	Sheets 1 of 1