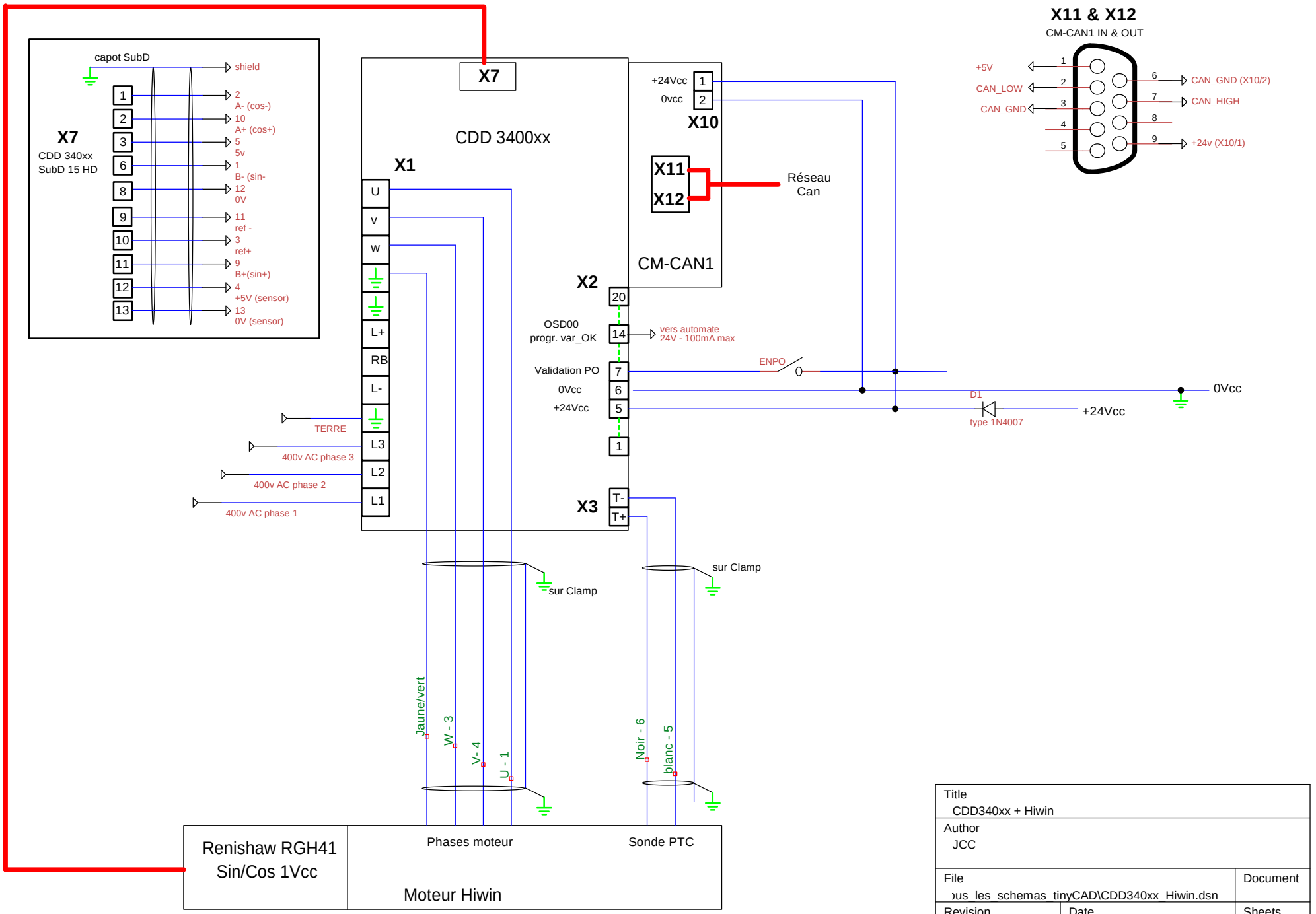

Title CDD340xx + Hiwin		
Author JCC		
File ous_les_schemas_tinyCAD\CDD340xx_Hiwin.dsn		Document
Revision 1.0	Date 21/07/08	Sheets 1 of 1