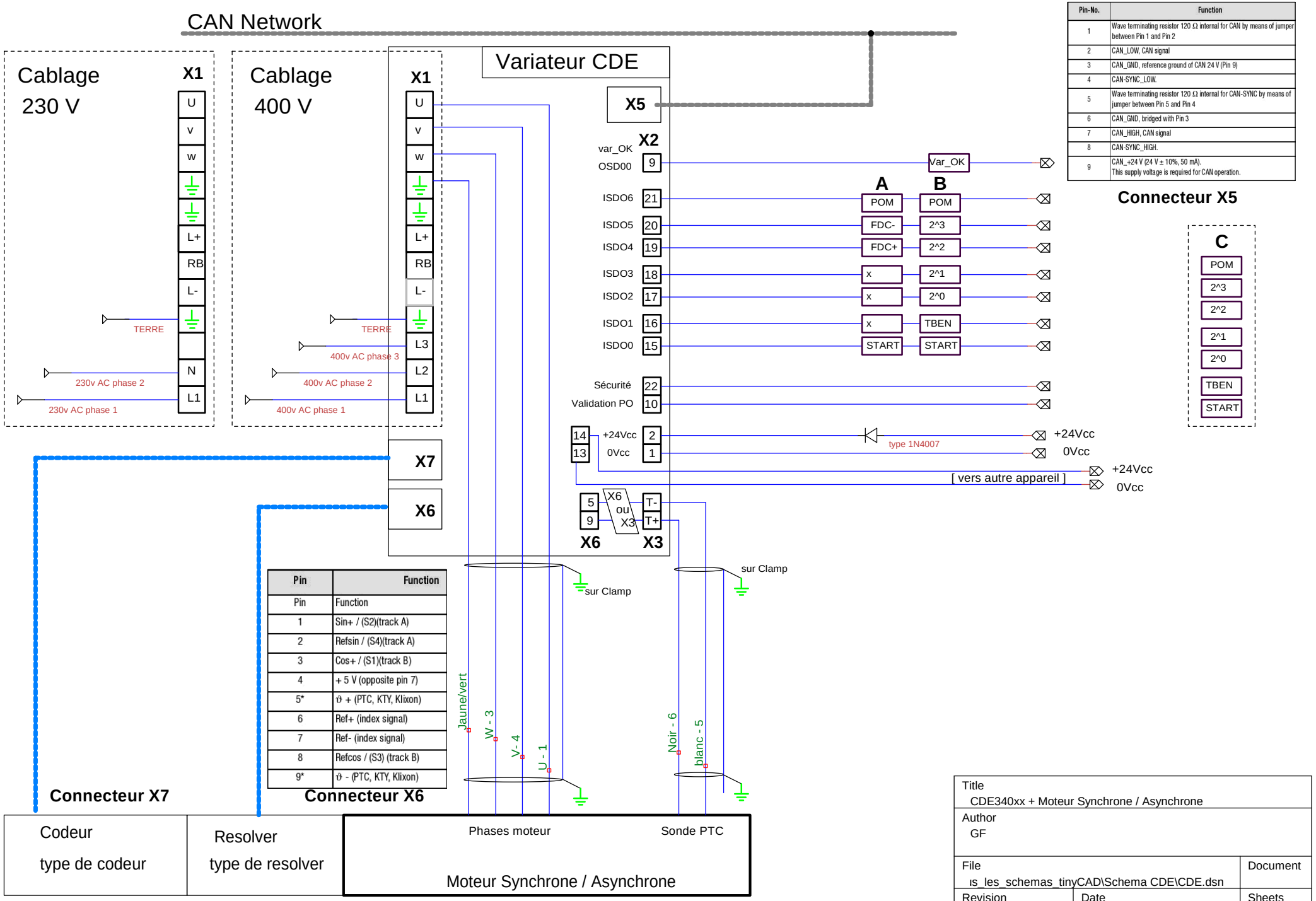

Pin-No.	Function
1	Wave terminating resistor 120 Ω internal for CAN by means of jumper between Pin 1 and Pin 2
2	CAN_LOW, CAN signal
3	CAN_GND, reference ground of CAN 24 V (Pin 9)
4	CAN-SYNC_LOW.
5	Wave terminating resistor 120 Ω internal for CAN-SYNC by means of jumper between Pin 5 and Pin 4
6	CAN_GND, bridged with Pin 3
7	CAN_HIGH, CAN signal
8	CAN-SYNC_HIGH.
9	CAN_+24 V (24 V ± 10%, 50 mA). This supply voltage is required for CAN operation.

Connecteur X5

C

POM
2^3
2^2
2^1
2^0
TBEN
START

Pin	Function
Pin	Function
1	Sin+ / (S2)(track A)
2	Refsin / (S4)(track A)
3	Cos+ / (S1)(track B)
4	+ 5 V (opposite pin 7)
5*	ϑ + (PTC, KTY, Klixon)
6	Ref+ (index signal)
7	Ref- (index signal)
8	Refcos / (S3) (track B)
9*	ϑ - (PTC, KTY, Klixon)

Title	CDE340xx + Moteur Synchrone / Asynchrone
Author	GF
File	is_les_schemas_tinyCAD\Schema CDE\CDE.dsn
Document	
Revision	1.1
Date	2010-05-02
Sheets	1 of 1